UnicornHygienics

Electronic Vending Dispenser

TECHNICAL REFERENCE MANUAL

Issue 5 - 2019

TECHNICAL
REFERENCE MANUAL

for

Multivend

ELECTRONIC
VENDING DISPENSER

For further technical advice and
product service information please contact:

Unicorn Hygienics

Telephone	**0044 (0)28 9264 0827**
Fax	**0044 (0)28 9262 5616**
Website	**www.unicorn-hygienics.com**
Email	**info@unicorn-hygienics.com**

CONTENTS

1 INTRODUCTION 3

1.1 Dispenser operation 3
1.2 Key dispenser details 4
1.2.1 Dispenser dimensions 4
1.2.2 Power supply 4
1.2.3 Operating environment 4
1.3 Installation 4
1.3.1 Tools required 4
1.3.2 Kit supplied with dispenser 4
1.3.3 Locally supplied fittings 5
1.3.4 Location 5
1.4 Installation procedure 5
1.4.1 Unpacking the dispenser 5
1.4.2 Locating the lower bracket on the wall (Fig 1-1 for plastic m/c only) 5
1.4.3 Positioning the upper bracket (plastic m/c only) 5
1.4.4 Fastening the dispenser to the wall (Fig 1-1 for metal m/c only) 6
1.4.5 Establishing accurate mounting 7
1.4.6 Securing the dispenser (plastic m/c only) 7
1.4.7 Loading the dispenser 7
1.4.8 Installing the Power Pack 7

2 MACHINE CHECKING PROCEDURE 8

2.1 General 8
2.2 Powering-up 8
2.3 Checking for basic operation 8
2.4 Testing all the shelves 8
2.5 Coin system testing 8
2.6 Final vend checks 8
2.8 Customer hand-over 9

3 TROUBLE SHOOTING AND REPAIRS 9

3.1 Useful tools 9
3.2 Fault identification 9
3.3 Table of Problems and most likely associated causes 10
3.4 Component removal and replacement 12
3.4.1 Shelf 12
3.4.2 Multivend Controller board 12
3.4.3 Motor loom 13
3.4.4 Power pack 13
3.4.5 Coin track 13
3.4.6 Reject chute 14
3.4.7 Coin sorter 14

3.4.8 Main window and push buttons 14
3.4.9 LCD 15
3.4.10 Display window 15
3.4.11 Lock 15
3.4.12 Main door 16
3.4.13 Product flap and Security flap 16
3.4.14 Product bowl 17

4 SHELF ADJUSTMENT FOR CHANGE OF PACK SIZE 23

5 SERVICE REPLACEMENT SPARE PARTS 25

6 ELECTRONIC SYSTEM 26

6.1 Vend price & button to shelf relationships. 26
6.1.1 Vend prices 26
6.1.2 Button to shelf relationships 26
6.1.3 Auxiliary shelf options 26
6.2 Other currencies 27
6.3 Machine unique ID 27

7 MULTIVEND AND THE ENVIRONMENT 31

7.1 Raw Materials 31
7.2 Energy usage 31
7.3 Contamination 31
7.4 Waste production and disposal 31

8 COINTRACK TYPES 32

8.1 Coin track types in use 32
8.1.1 Coin track MKI 32
8.1.2 Coin track MKII 33

1 INTRODUCTION

The Unicorn Hygienics 'Multivend' coin operated electronic vending dispenser is a wall-mounted unit able to handle up to ten separate product lines of cartoned stock in a 'book-shelf' arrangement. The dispenser is available in original white ABS plastic or steel white or silver.

Each identical shelf can be adjusted to cater for the packet size or shape used in the machine. On each shelf packets are spring-loaded to the rightmost end. A successful vend request and coin validation sequence by the user causes a motorised escapement on the appropriate shelf to eject one packet into the drop-chute, to fall past the security flap for collection by the user from the product bowl at the base of the dispenser.

1.1 Dispenser operation

The all-electronic Unicorn Hygienics coin validation and dispenser operating system is powered by a replaceable battery power pack. Dormant until activated by either a coin entry or button press, it can identify up to five different programmed coin types.

The system drives an LCD (liquid crystal display) information screen above the coin entry point to display vend prices, validated coin totals and helpful messages to the user.

Vend prices can be set from zero price (free-of-charge) upwards, and are easily revised by using the Multivend desktop app.

When a coin is successfully validated, the LCD total is immediately updated.

Non-accepted coins fall directly into the product bowl at the base of the machine for easy retrieval. All validated coins will drop straight into the cash box and these won´t be able to be refunded.

If an out of stock product is selected the LCD briefly flashes 'Out'.

The refund button may be used to abandon any operation, however all validated coins won´t be refunded.

If the validated coin total exceeds the price of a pack vended the 'excess' coin value is lost to the user.

When the Power pack is nearly exhausted the display reads **- Lo -** below the vend price, and the system will continue to operate for a while. Thereafter it will read **SERVICE** as well as **- Lo -** and will not vend products to allow the machine to conserve battery power whilst remaining in its dormant state. Any coins entered are returned automatically to the user.

1.2 Key dispenser details

1.2.1 Dispenser dimensions

		Size & weight	*Shipping & packing data*
Width		360 mm	430 mm
Depth		230 mm	300 mm
Height		1000 mm	1130 mm
Weight	*- plastic m/c*	13.5 kg	16.6 kg
	- steel m/c	20.8 kg	23.9 kg

1.2.2 Power supply

9V dc 6W power pack.

1.2.3 Operating environment

The dispenser is intended for operation in internal locations with ambient temperatures in the range 15 to 30°C (59 to 86°F) and relative humidity below 20%. Extremes of temperature and/or humidity may cause unreliable operation - seek advice from Unicorn Hygienics.

1.3 Installation

1.3.1 Tools required

- Two speed hammer drill
- No. 12 masonry bit
- Flat blade screwdriver suitable for No. 12 screws
- 4mm and 2.5 mm hex socket screw drivers
- Spirit level suitable for horizontal and vertical use
- 6ft or 2m tape

1.3.2 Kit supplied with dispenser

- Power pack
- Fixing brackets - 2 off (plastic m/c only)
- Masonry plugs No. 12 - 4 off
- Steel fixing screws No. 12 x 2” pan-headed slotted (NOT Pozidrive) - 4 off
- Steel hex socket cap M5 x 10 security screw - 1 off
- Packing washers 3mm thick - 2 off

1.3.3 Locally supplied fittings

- For fixing to wood or plasterboard walls - suitable butterfly fasteners
- For fixing to stepped walls (half tiled) - scrap hardboard equal to the step difference

1.3.4 Location

Select a suitable prominent site. A conspicuous location discourages misuse. Take care not to obstruct access to other fittings, door opening arcs etc.

Choose a strong masonry wall if possible. The installation must be strong enough to prevent the dispenser from being pulled away from the wall in the event of vandalism or misuse. If the customer's chosen site is unsuitable, explain the problem and suggest a more appropriate alternative.

1.4 Installation procedure

1.4.1 Unpacking the dispenser

Remove the dispenser and all other parts from the packing case. Lay the unit on its back on the floor. Use your master key to unlock and open the door. The key turns clockwise 180° to unlock, anti-clockwise to lock.

1.4.2 Locating the lower bracket on the wall (Fig 1-1 for plastic m/c only)

The plastic dispenser is attached to the wall by two identical metal brackets, allowing the machine to be later removed / replaced simply by removal of a security screw.

Mark the position of the lower bracket on the wall as shown in Figure (1-1). Mark the position of the left mounting hole through the bracket peg, and drill and plug this hole. Using a No. 12 screw provided loosely attach a bracket to the wall, level the bracket, and mark the right screw position. Drill and plug the right hole and insert the second screw. Tighten both screws to secure the lower bracket to the wall.

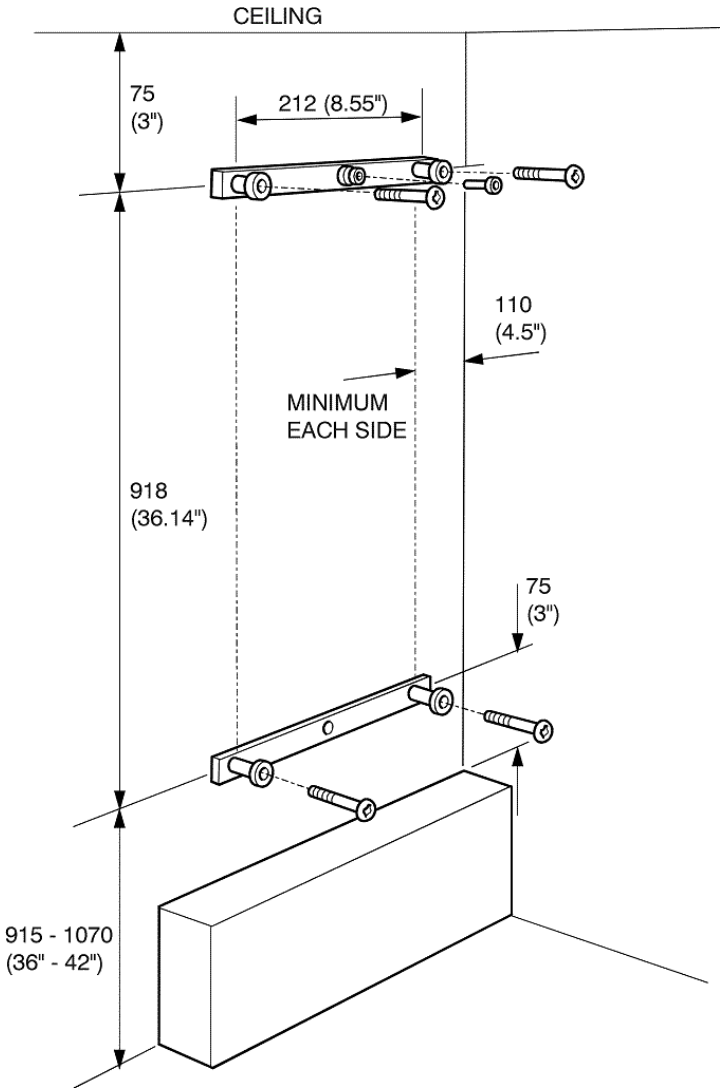

1.4.3 Positioning the upper bracket (plastic m/c only)

Raise the top of the dispenser, put the upper bracket in from behind and fully engage the two mushroom-headed

diecast pegs into the top of the diecast “Keyhole” plates. Insert and tighten the socket cap security screw from inside the dispenser through the central hole above the top shelf. Pick the dispenser up and locate it on the lower bracket, ensuring both pegs are fully engaged. Use the spirit level to ensure that the unit is exactly upright, then without moving it carefully mark the position of the two upper bracket holes on the wall from inside the dispenser through the diecast mounting peg holes (use a scribe or long thin pencil etc.).

Take the machine down from the wall, leaving the upper bracket secured in the case. Drill and plug the two upper mounting points, then use a centre-punch or ball-point pen to open-up the two plugged holes for easy screw entry. Lift the dispenser onto the lower mounting bracket again and push it firmly down to fully engage the two pegs. Insert the two securing screws from inside the machine through the upper bracket holes into the wall plugs, and fully tighten them.

1.4.4 Fastening the dispenser to the wall (Fig 1-1 for metal m/c only)

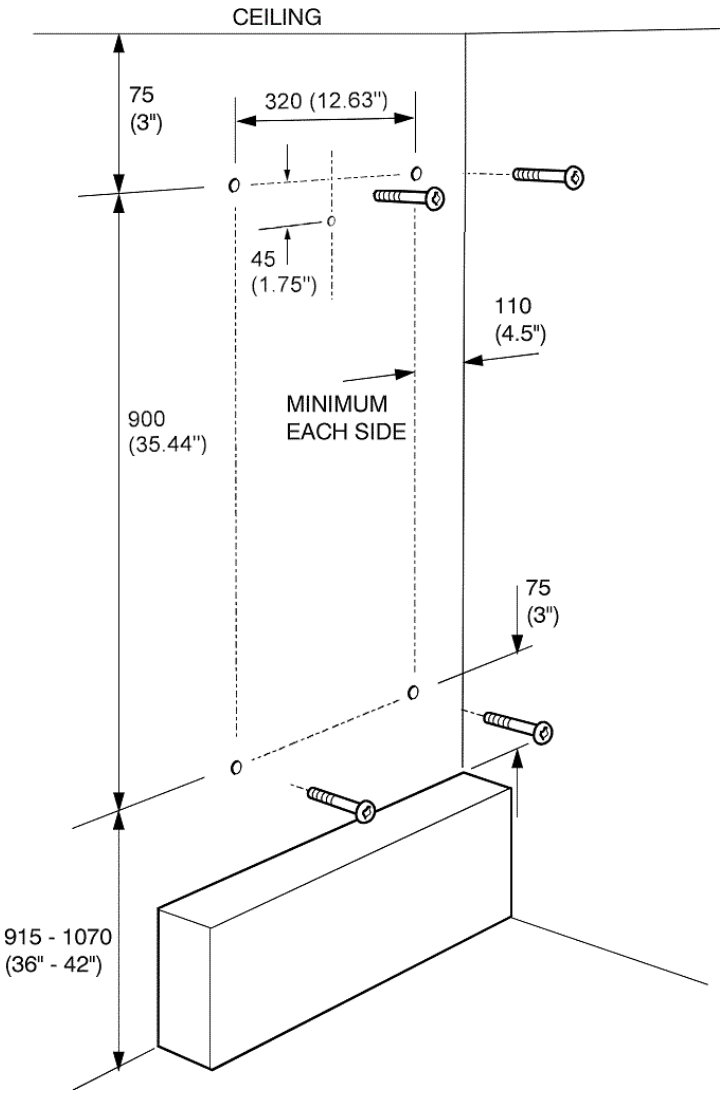

The metal dispenser is attached directly to the wall by four masonry screws, inserted through the body of the machine. This procedure should be carried out by two people, as the weight and size of the empty dispenser may exceed statutory guidelines for a single person.

Scribe the intended vertical centre-line of the machine on the wall, and mark a position 45mm (1 ¾”) from the top. Drill a hole at this position to accept a screw about 25mm (1”) long (not supplied), plug the hole and insert the screw until the head is about 8mm (3/8”) clear of the wall. Pick the machine up and hang it on this screw with the head through the small triangular hole at the top in the back.

Holding the machine exactly upright, mark the four mounting screw positions on the wall through the holes in the back of the dispenser cabinet. These should be in a rectangular pattern 320mm (12 5/8”) apart horizontally and 900mm (35 7/16”) apart vertically. Remove the machine, drill and plug all four holes, then use a centre-punch or ball-point pen to open them up for easy screw entry.

Hang the dispenser back up on the wall with the first screw through the triangular hole again, insert the four mounting screws through the corner holes in the back of the cabinet, and tighten them securely.

1.4.5 Establishing accurate mounting

Check the action of the door and lock. It is essential that it closes cleanly without lifting or twisting. If any misalignment is seen this is probably caused by an uneven wall, and you may need to take the dispenser down to pack one of the mounting points away from the wall. Repeat this step until the door closes satisfactorily.

1.4.6 Securing the dispenser (plastic m/c only)

Check that the security screw is tightly in place, and that the dispenser cannot be wrenched upwards off the brackets - particularly the unsecured lower one. Replace the money box.

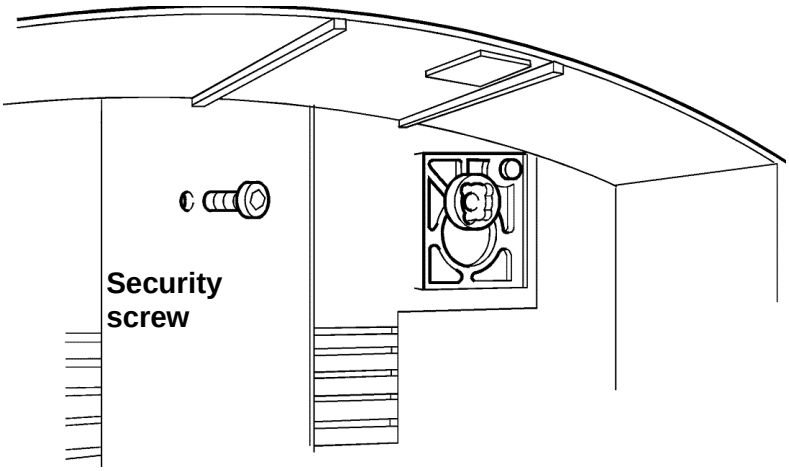

1.4.7 Loading the dispenser

Fill all the shelves with the appropriate products.

Note that tuck-in cartons have one good folded edge and the tucked-in side "open" for finger access. Put the smooth folded edge as the ***right rear corner*** for the cam to push against.

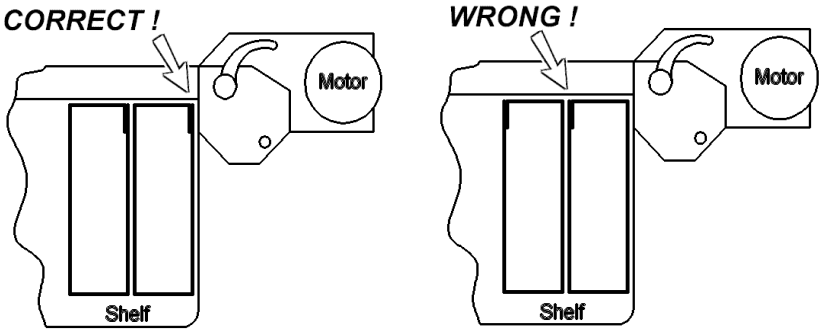

1.4.8 Installing the Power Pack

Remove the rightmost battery strap screw in the door, put the Power Pack in the cradle with the label towards you and the lead at the bottom. Do NOT connect the power pack. Replace the battery strap and re-tighten the screw.

2 MACHINE CHECKING PROCEDURE

2.1 General

Check thoroughly through the dispenser to ensure that all the packs are correctly settled on their respective shelves, and all loom wiring and system parts appear to be correctly fitted. Do NOT touch any electronic board surfaces or wire ends with your bare hands or tools as electrostatic discharge between you and any part of the electronic system can easily destroy sensitive components.

2.2 Powering-up

Attach the Power Pack lead to the connector below it on the back of the Multivend Controller board. The dispenser will power-up immediately.

2.3 Checking for basic operation

Press each product button in turn to check that all prices displayed by the LCD correspond to the price card adjacent to the button.

Refer to Section 3 to resolve any unexpected responses until the dispenser performs as expected.

2.4 Testing all the shelves

You should now check the correct action of every shelf by pressing each product button and then inserting the right amount in turn and observing the corresponding shelf dispense one pack. If any problems occur refer to Section 3 and then repeat these tests.

2.5 Coin system testing

Put at least three coins of every currently available national denomination into the coin slot and check that the coin validation system and totalised value shown on the LCD responds appropriately – Please note the product needs to be selected before the coins are inserted or otherwise the coins will be refunded. You should expect on average eight or nine out of ten coins to be accepted by the system. It is likely however that dense round coins (e.g. £1) will be more reliably validated than light ones or heptagonal ones (e.g. 20p).

You may carry out these tests with the door open. Note that any rejected coins or validated coins cashed or refunded by the escrow will drop onto the floor unless you place your hand or a suitable receptacle underneath.

If the system performance is not acceptable refer to Section 3.

2.6 Final vend checks

Close the door and using appropriate coins, vend one pack of each product. When this has been completed open the door, replace all the vended packs on their correct shelves and retrieve your coins. You have now completed the thorough checks necessary to establish that the dispenser is functioning correctly, and in the case of a new installation the unit is now ready for hand-over to the owner.

2.8 Customer hand-over

Demonstrate the operation of the dispenser to the customer as follows -

- Start with the door closed and locked. Show that each product button produces the correct vend on the LCD, press a button and then insert some coins to vend at least one pack.
- Show that the key turns the lock clockwise 180° to unlock and is then trapped until the lock returns to the 'locked' position.
- Demonstrate how refill packs should be placed on the shelves to the right of the spring-return red levers and show how to retrieve coins from the money box. Replace the money box, shut and lock the door.

3 TROUBLE SHOOTING AND REPAIRS

3.1 Useful tools

- Master key
- Pozidriv #1 screwdriver – preferably magnetised
- 3mm (1/8") flat blade screwdriver
- Engineers and Fine nosed pliers
- Tube of Super-glue
- Silicon Spray

3.2 Fault identification

Problems with the dispenser will generally fall into one of these two areas:

- Electronic system - failure to wake up, recognise or totalise coin values properly, or to route power to the shelves to deliver packets.

  The cause will often be resolved without spare parts – i.e. a loose electrical connector requires re-connection, otherwise a system component may have failed and require replacement. In all such cases it is extremely important to check through the system in an orderly and logical way to determine the primary cause of the failure to operate, because a fault in one component can easily prevent another fully operational part from functioning correctly and thus appear faulty itself.
- Mechanical hardware - coins are accepted and totalised and the shelf motors function but the dispenser fails to deliver packs, or obvious physical damage must be repaired.

  In these cases it is much more likely that the fault will be localised and easily identified, and the use of spare parts to replace faulty hardware will be straightforward and obvious.

NOTE!

***The electronic system is fairly robust and resistant to abuse, but you should never touch the components or bare wires even when they are disconnected and/or removed from the dispenser as this may allow electrostatic discharge (ESD) to corrupt stored data or even destroy a component. ***

Whilst removing or replacing any parts of the electronic system it is good practice to keep the Power Pack plugged-in as this may help to 'earth' the system and minimise ESD problems.

3.3 Table of Problems and most likely associated causes

Problem	***List of possible causes***
Dispenser completely inoperative	- Power pack exhausted – replace - Power pack connector undone - re-connect - Coin sorter ribbon cable unplugged - re-connect
Partial or no electronic display	- LCD faulty – replace - LCD cable unplugged – re-connect
System alive but misses or rejects some or all coins	- Coin sorter faulty – replace.
Systems accepts coins but no shelves operate	- Motor loom(s) unplugged - re-connect - Multivend controller failure - replace PCB
System accepts coins but one or more shelves do not work	- Connector to shelf undone - re-connect - Shelf motorised system faulty - replace complete shelf - Multivend controller failure - replace PCB
System accepts coins but shelves report "out"	- Stock may be required - check all shelves - Shelf micro-switch may be faulty - replace shelf - Rotary shelf cam stopped at 'wrong' position - turn until clear - Multivend controller failure - replace PCB

System fails to accept one or more type(s) of coin	- Coin sorter faulty – replace.
Packs remain ‘loose’ on shelf and do not feed to the right	- Packs refilled to left of red Pusher - replace on the right - Pusher is ‘sticky’ - apply silicon spray (NOT oil!) and operate vigorously to clear or replace shelf - Pusher return spring broken - replace shelf
Security or main product flaps broken or jammed	- Clean and check pivots - use silicon spray to lubricate - Check tightness of Product Bowl screws (on rear) - Retaining bracket loose - push anti-clockwise & re-tighten - Replace broken items as required
Lock stiff or inoperative	- Replace lock if necessary - Use silicon spray on lock and Latch Bar - check all screws etc.
Main or display windows defaced or broken	- Replace as required
Buttons appear damaged and/or do not work	- Replace individually
Coins jammed in Coin Track runways	- Remove Coin Track if necessary, carefully clear with wire etc. - Check for dirt or foreign object(s) lodged in Coin Track - Replace Coin Track if fault persists

3.4 Component removal and replacement

3.4.1 Shelf

See Fig 3-1(1) and Fig 3-2

CAUTION - Do not pull the red pusher bar beyond the end of the aluminium slide as the pusher bar wheels will fall out.

a) Remove all packs from the shelf.

b) Unclip the red Shelf Strut from all shelves and remove

c) Remove the adjacent cardboard chute infill out as required.

d) Disconnect the lead to the motor.

e) Mark the position of the aluminium rail top edge on the rear face of the case and the engagement of the shelf left front corner steadying tabs in the case side webs.

f) Remove and save the two screws holding the aluminium rail to the case, remove the shelf.

g) Set the new shelf Front Guide and Product Width Adjuster (Fig 3-2) to the correct pack length and thickness - use the old shelf settings to guide you.

h) Place the new shelf in the case so the top edge of its aluminium rail and the engagement of its left front corner tabs are against the marks made in step (3).

i) Replace the two mounting screws through upper or lower halves of the holes in the aluminium rail and retighten.

j) Reconnect the electrical lead to the motor, taking care to ensure the correct engagement of the polarising keyway.

k) Check that the rotating cam is towards the rear.

l) Replace the cardboard chute infill and clip the red Strut back into place.

m) Where an under-shelf Ski was fitted to the old shelf this should be clipped into the new one.

n) Replace the packs on the shelf.

o) Carry out the Machine Checking Procedure (Section 2) to ensure that the system is fully operational.

NOTE - If the replacement shelf is adjusted to handle a taller or shorter product, all shelves below may need to be repositioned

3.4.2 Multivend Controller board

See Fig 3-1 (2)

a) Disconnect the Battery, LCD cable, Motor Loom (Top and Bottom) and the Coin sorter cable from the board.

b) Remove the Multivend Controller board - this is held in place by 10 screws.

c) Fit and screw in place a new Multivend Controller board and re-connect the five connectors from step (a).

d) Carry out the Machine Checking Procedure (Section 2) to ensure that the system is fully operational.

3.4.3 Motor loom

See Fig 3-1 (16)

a) Remove the cardboard chute infill.

b) Disconnect all the connectors to the shelf motors and remove the self-adhesive pads holding the looms to the case right rear vertical corner area.

c) Disconnect the two 10-way connectors from the Multivend Controller board and remove the looms.

d) Place the new looms in position, and re-connect all the shelves ensuring that the connector polarising keyways are correctly inserted.

e) Fix the self-adhesive pads into the case right rear corner area to support the looms in place.

f) Insert the two 10-way connectors into the Multivend Controller board.

g) Replace the cardboard chute infill.

h) Carry out the Machine Checking Procedure (Section 2) to ensure that the system is fully operational.

3.4.4 Power pack

See Fig 3-1(12)

a) Remove the power pack connector from the Multivend Controller board.

b) Remove the Power Pack by pulling it upwards and outwards and replace with another.

c) Re-connect the Power Pack connector onto the Multivend Controller board.

d) Carry out the Machine Checking Procedure (Section 2) to ensure that the system is fully operational

3.4.5 Coin track

See Fig 3-1 (9)

a) Remove the four lower screws holding the coin track cover, then remove the final top screw fixing the coin tack bottom to the coloured support structure.

b) If there are any washers present between the coin track and the coloured support structure on the two bottom screws, set them to the side and replace once reassembling.

c) Replace the coin track bottom and cover and begin to screw the parts back onto the support structure starting with the top screw working down to the bottom screws.

d) Carry out the Machine Checking Procedure (Section 2) to ensure that the system is fully operational.

3.4.6 Reject chute

See Fig 3-1 (17)

a) Remove the screw holding the reject chute top, then remove the two screws fixing the reject chute bottom to the coloured support structure.

b) Replace the reject chute top and bottom, fixing it into the machine by reversing the step above.

c) Carry out the Machine Checking Procedure (Section 2) to ensure that the system is fully operational.

3.4.7 Coin sorter

See Fig 3-1 (15)

a) Remove the screw holding the reject chute top, then remove the two screws fixing the reject chute bottom to the coloured support structure.

b) Unplug the coin sorter ribbon cable from the coin sorter or the Multivend Controller board depending to whether the ribbon cable is being replaced.

c) Slide the coin sorter down toward the bottom of the door which will release it from the metal brackets.

d) Replace the coin sorter with the new unit, fixing it into the machine by reversing the step above.

e) Reattach the reject chute bottom and cover to the coloured support structure.

f) Plug in the coin sorter ribbon cable to the coin sorter and Multivend Controller board.

g) Carry out the Machine Checking Procedure (Section 2) to ensure that the system is fully operational.

3.4.8 Main window and push buttons

See Fig 3-4 (13) and (18)

a) Remove the ten Product and Price Cards from behind the window.

b) Unscrew and remove the fourteen screws that secure the coloured support structure to the door from behind the Coin Track assembly, moving cables as necessary, and gently pull the Coin Track together with the coloured support structure free.

c) The window and buttons assembly and the mask can now be removed and replaced. retain the buttons for fitment to the new window

d) Individual button assemblies can be removed and replaced.

e) Replace the coloured support structure and re-tighten the fourteen screws.

f) Replace the Product and Price Cards in the correct locations.

g) Carry out the Machine Checking Procedure (Section 2) to ensure that the system is fully operational.

3.4.9 LCD

See Fig 3-1 (11)

a) Disconnect the LCD cable from the Multivend Controller board. Please take note of the orientation of the cable when removing it.

b) Unscrew and remove the fourteen screws that secure the coloured support structure to the door from behind the Coin Track assembly, moving cables as necessary, and gently pull the coloured support structure free.

c) Remove the four screws retaining the LCD to the door - the LCD is now free.

d) Replace the LCD and re-tighten the four screws.

e) Replace the coloured support structure and re-tighten the fourteen screws.

f) Reattach the LCD cable on the Multivend controller board. Be sure to insert the cable in the same orientation it was removed as noted in step (a).

g) Carry out the Machine Checking Procedure (Section 2) to ensure that the system is fully operational.

3.4.10 Display window

See Fig 3-4 (14)

a) Unscrew and remove the fourteen screws that secure the coloured support structure to the door from behind the Coin track assembly, moving cables as necessary, and gently pull the coloured support structure free.

b) Remove the old LCD window out of its aperture (this may be glued in place).

c) Slide a new window with its thicker edge toward the bottom of the door into position and glue in place.

d) Refit the coloured support structure and re-tighten the fourteen screws.

3.4.11 Lock

See Fig 3-1 (8) and 3-3 (8)

a) With the door open, turn the key to the locked position and remove the key.

b) Unscrew and remove the small brass nut that holds the plastic locking cam in place. Remove the cam.

c) Behind the plastic cam is a tiny metal shaped washer which should have its lobe to the left (provided the key has been removed). Remove this metal shaped washer.

d) Unscrew and remove the large brass nut holding the lock in place and remove it together with the lock backing plate.

e) Remove the lock from the front of the door.

f) Take the new lock and turn it to its locked position and remove the key. Fit the new lock into the door with the key tab cut-out at the top.

g) Refit the lock backing plate and large brass nut and tighten securely.

h) Refit the metal lock cam, ensuring that the lobe is to the left when looking at the back of the door.

i) Refit the plastic cam, ensuring that it fits correctly into the locking bar fork. Replace the small brass nut and tighten securely.

j) Carry out the Machine Checking Procedure (Section 2) to ensure that the system is fully operational.

k) Ensure that the customer is given the two new keys.

3.4.12 Main door

See Fig 3-1 (10) and Fig 3-3 (10)

a) Disconnect the Motor Loom (Top and Bottom) from the Multivend Controller.

b) Remove and save the Power Pack, the coloured support structure and the main window as described elsewhere.

c) Remove the self-adhesive tape securing the Motor Loom to the lower and upper aspect of the door and coil the cable in the case.

d) Remove the ten screws retaining the Door to the Case - the door may now be replaced.

e) Replace the main window, coloured support structure, and the Power Pack as described elsewhere.

f) Refit the Motor Loom (Top and Bottom) to the Multivend Controller as before.

g) Carry out the Machine Checking Procedure (Section 2) to ensure that the system is fully operational.

h) Ensure that the customer is given the two new keys.

3.4.13 Product flap and Security flap

See Fig 3-1 (6) and (7) and Fig 3-5 (6) and (7)

a) Product Flap - loosen the screws holding the right and left ends of the hinge pin and slide the pin to the left. The Product Flap may now be removed and replaced. In a Multivend dispenser also unhook the Security Flap wire.

b) Security Flap - Multivend dispensers
Remove the two screws holding the baseplate to the dispenser and unhook the Security Flap wire. Replacement is the reverse procedure.

c) Replace and re-tighten the screws as necessary.

d) Carry out the Machine Checking Procedure (Section 2) to ensure that the system is fully operational.

3.4.14 Product bowl

See Fig 3-1 (5) and Fig 3-5 (5)

a) Remove the Product and Security Flaps as above.

b) After removing all packs from the top shelf, remove and save the socket-cap security screw (central and immediately above the shelf).

c) Lift the dispenser from the wall and place on its right side with the door open.

d) Remove the two screws from the back holding the Product Bowl and remove the Bowl.

e) Place a new Bowl into the dispenser, replace and tighten the two retaining screws.

f) Re-hang the dispenser on the wall brackets and replace the socket cap security screw.

g) Replace the packs from the top shelf.

h) Replace the Product and Security Flaps.

i) Carry out the Machine Checking Procedure (Section 2) to ensure that the system is fully operational.

Key to Figs 3-1 to 3-5

1. Shelf assembly
2. Multivend Controller Board
3. Battery Strap
4. Cash box
5. Delivery bowl
6. Product flap
7. Security flap
8. Door lock
9. Coin track
10. Door
11. LCD
12. Power pack
13. Main window and push button assembly
14. Display window
15. Coin sorter
16. Motor looms
17. Reject Chute
18. Push buttons
19. Coloured Support structure
20. Chute Infill
21. Shelf Support Strut
22. Ski Ramp
23. Pusher
24. Cabinet shelf securing racks
25. Motor power lead
26. Product
27. Width adjuster
28. Guide fastener
29. Securing screw
30. Front guide
31. Shelf
32. Drive cam
33. Product micro-switch
34. Shelf support rail

Figure 3-1 Dispenser general view

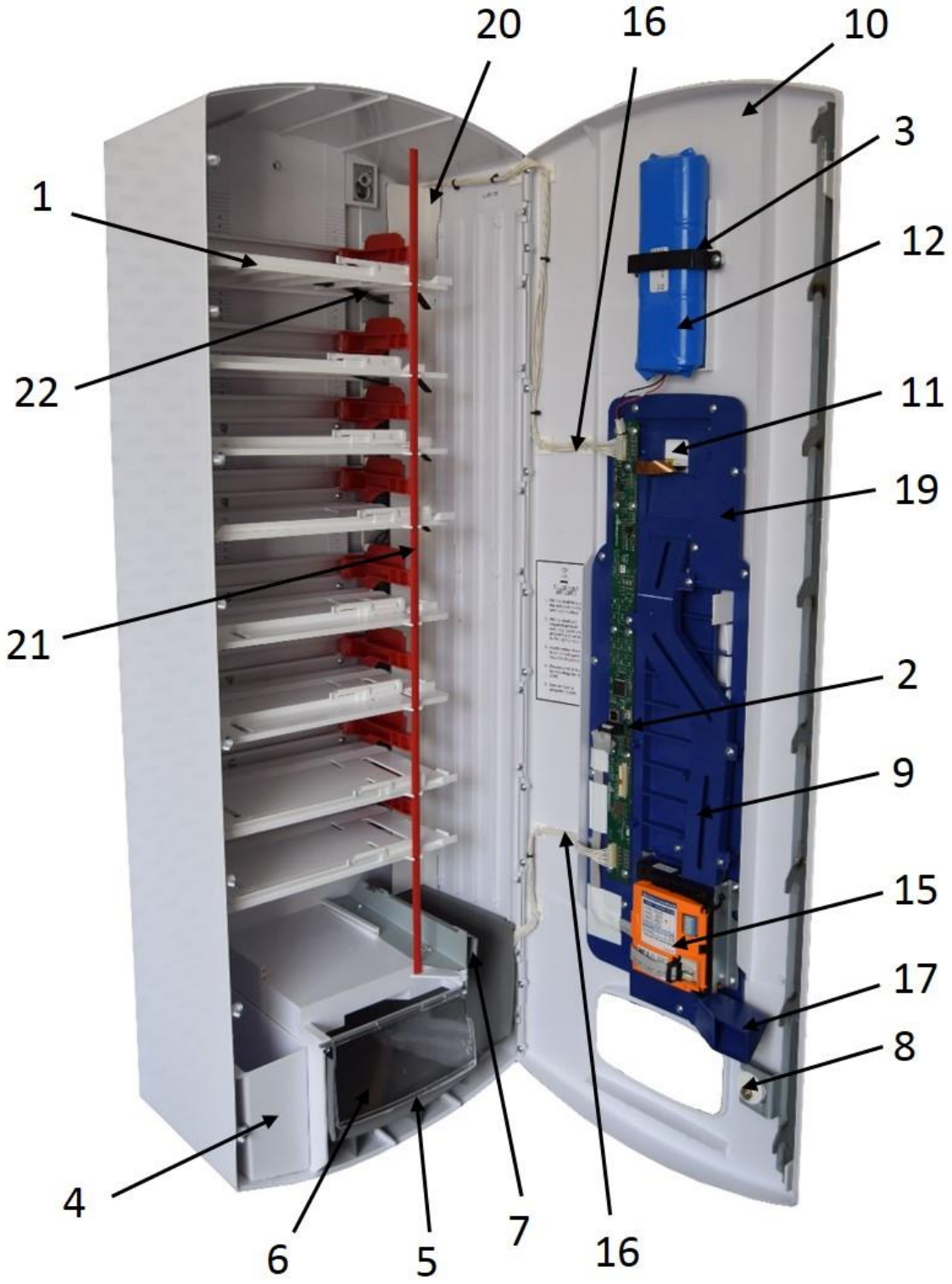

Figure 3-2 Shelf front guide adjustment

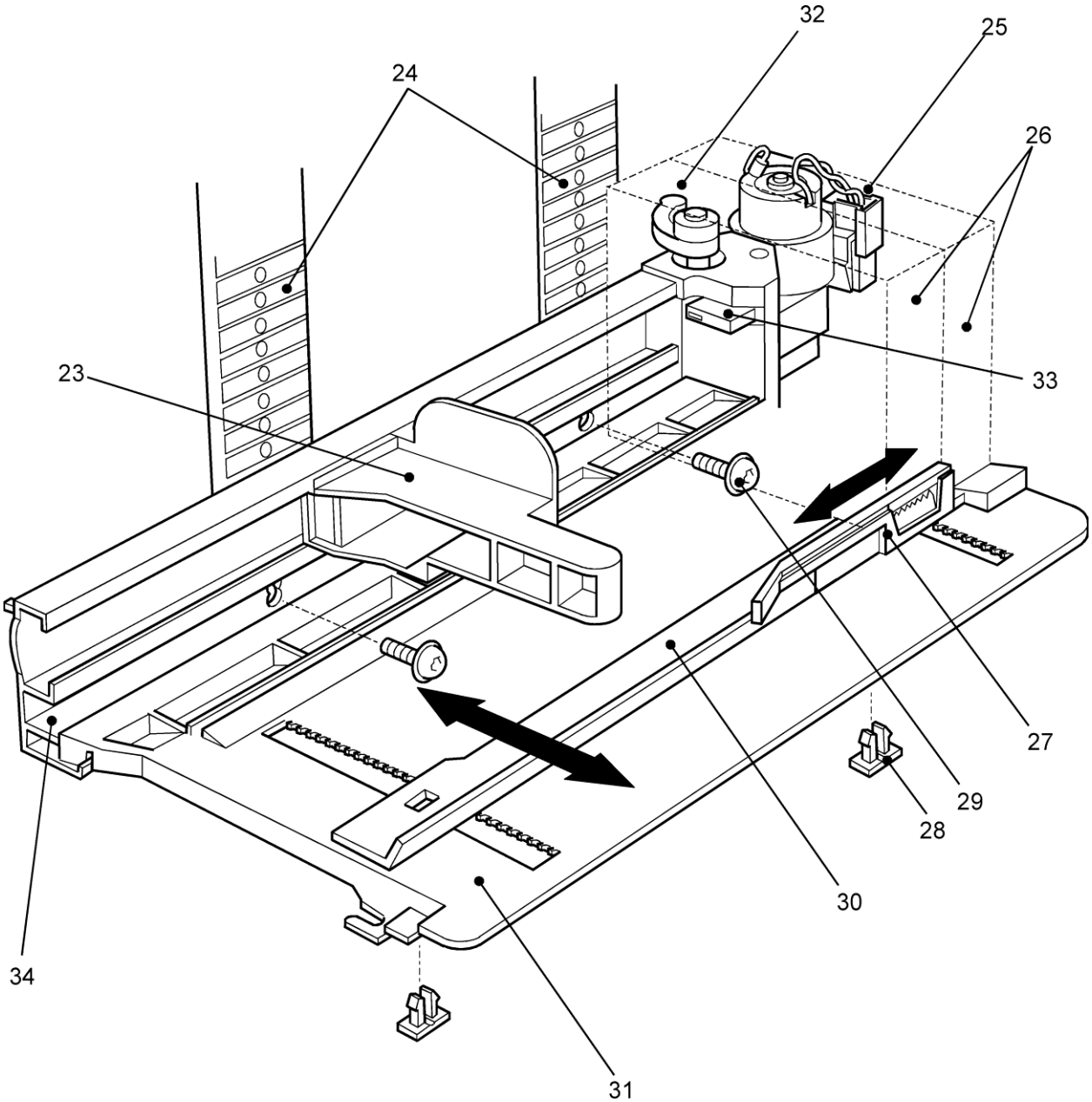

Figure 3-3 Lock and hinge

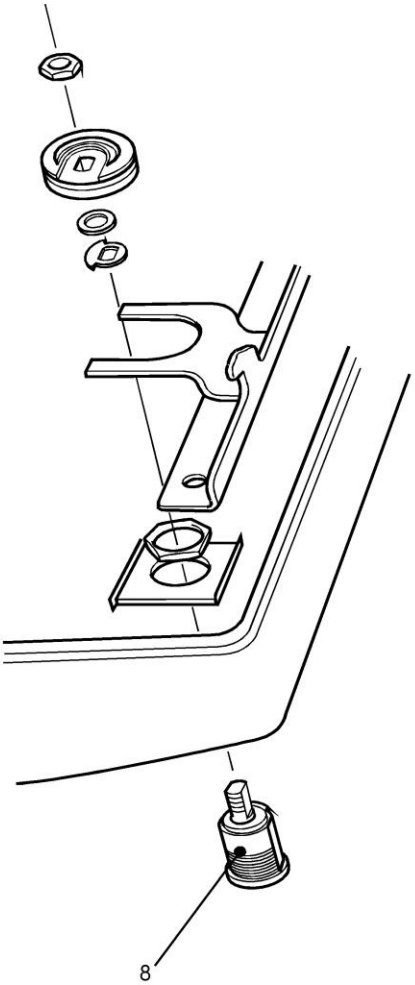

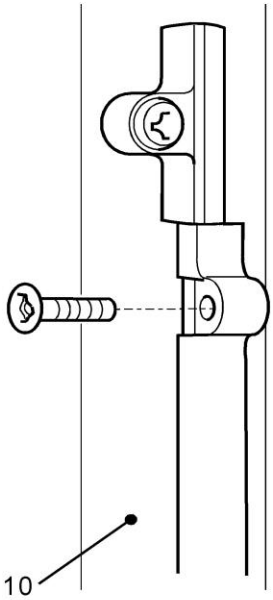

Figure 3-4 User Interface

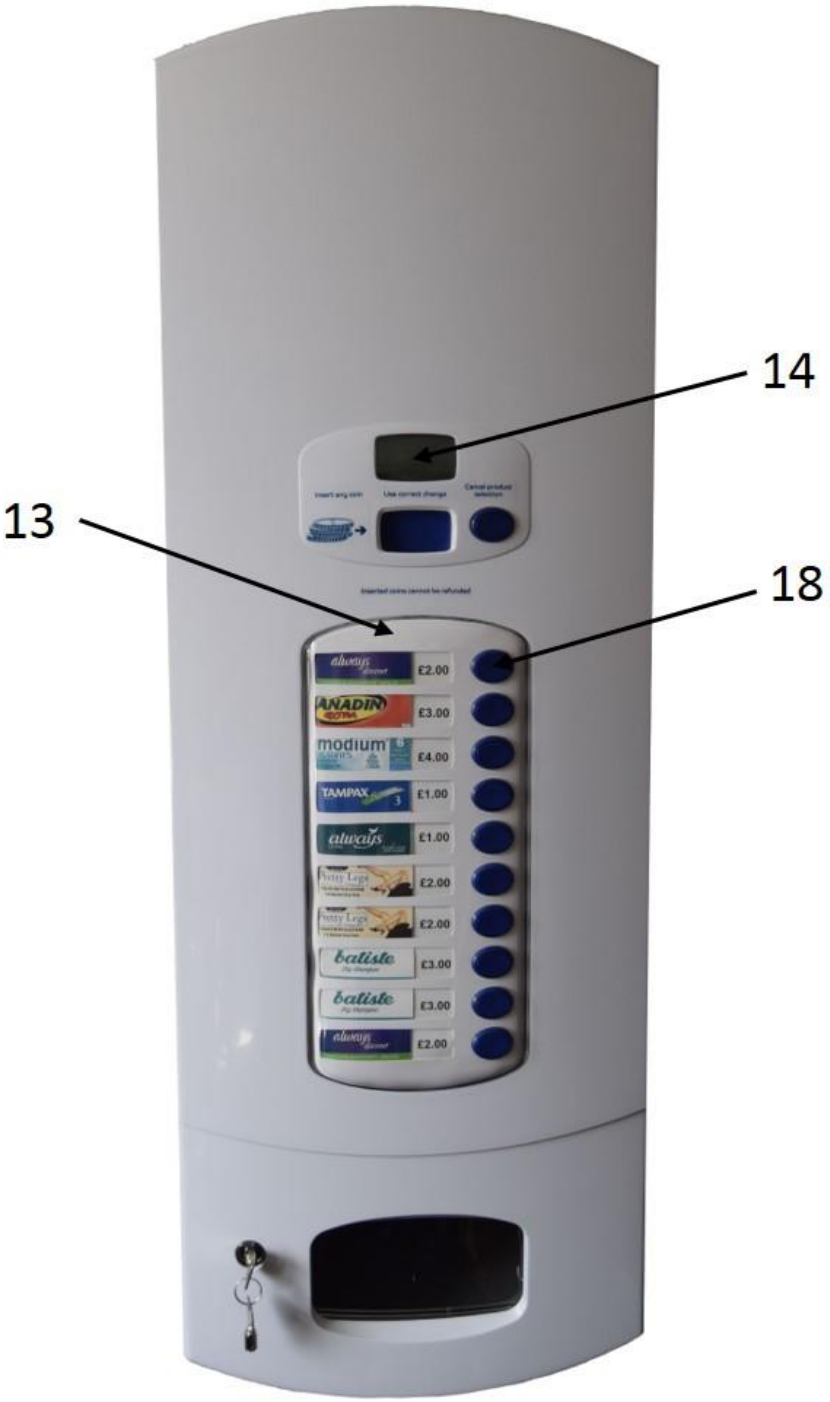

Figure 3-5 Pack delivery

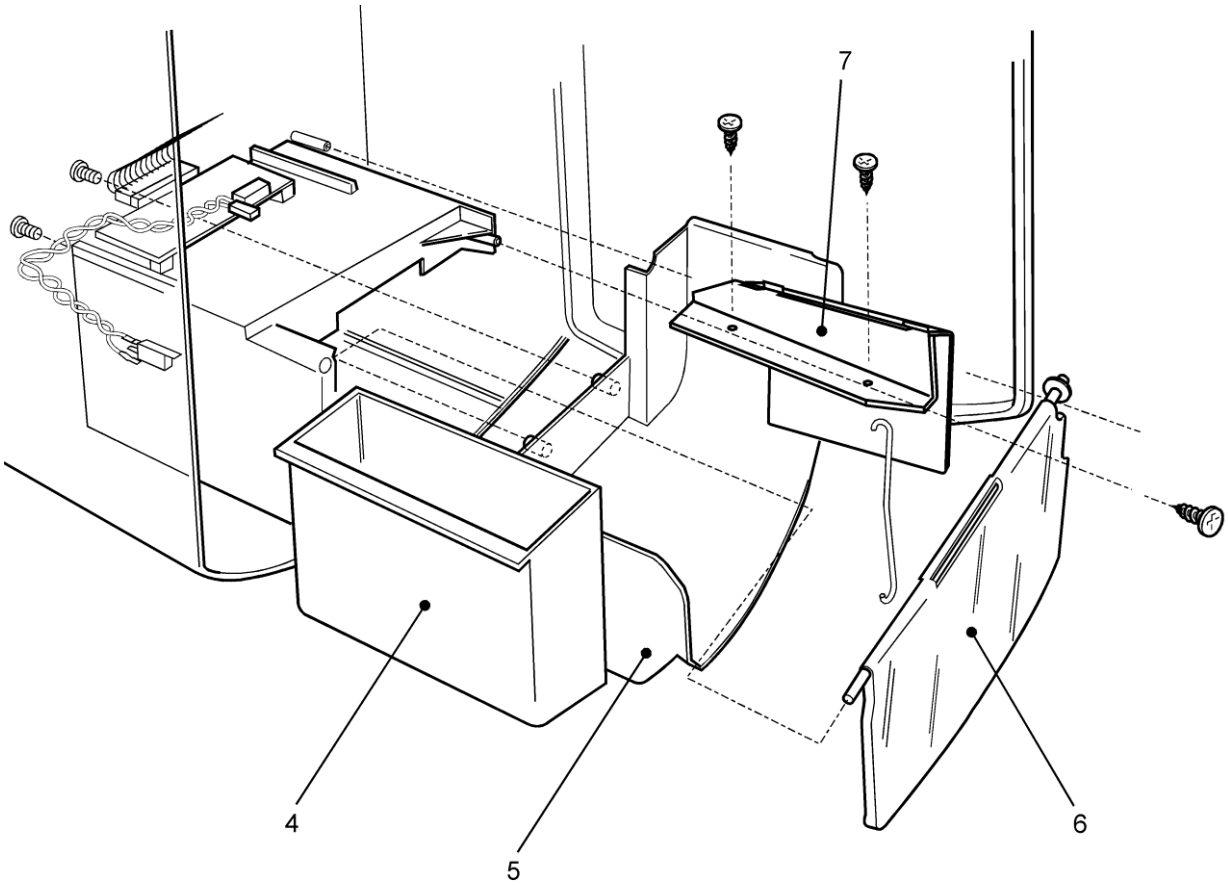

4 SHELF ADJUSTMENT FOR CHANGE OF PACK SIZE

a) With reference to Figure 3-2, disconnect the motor power lead from the motor loom (25).

b) Remove and retain the two screws (29) at the rear of the shelf and remove the shelf from the cabinet.

CAUTION - Do not pull the shelf pusher bar (Red) beyond the end of the aluminium slide, as the wheels etc. will fall out.

c) Pull the pusher bar (23) to the left to enable three or more of the products to be loaded onto the shelf.

d) Adjust the front guide (30) by pushing from the right so that the teeth are free of the rack. Push the front guide towards the product until it just touches, release the front guide to engage the teeth in the rack. The endways pack freedom should be the minimum possible.

e) Set the product width adjuster (27) on the right of the front guide to show approximately 20% of the second product, by releasing the adjuster from its clip and sliding along the ratchet.

f) Remove the product (26) from shelf below.

g) Measure the product height and add 18 mm, make a note of this measurement. Mark a line on the case back face this distance below the bottom of the shelf above.

h) Position the shelf against the cabinet rear securing rack (24) with it's lower edge at the mark made in paragraph (g) to set the shelf height. Fit the shelf into the slot at the side of the cabinet and ensuring the shelf is straight and level secure the shelf at the rear using the two screws (29) retained in paragraph (a).

i) Connect the motor power plug (25) to the motor loom socket.

j) Load the product (26) onto the shelf and replace the product on the shelf below and test the shelf operation.

NOTE - According to the height of the product fitted, it may be necessary to adjust the shelves below the one changed, using the same procedure.

k) When the shelves are adjusted correctly, carry out the check procedures as per Section 2 to ensure the dispenser is operating correctly.

l) Carry out customer handover procedures as per Section 2.

5 SERVICE REPLACEMENT SPARE PARTS

The following table lists the dispenser replacement spares and their part numbers.

Item code	*Description*
H3026300000	Multivend - Door
H3026400000	Multivend - Cash Box
H3026500000	Multivend - Powerpack
H3026700000	Multivend - Shelf x 2
H3027600710	Multivend - Price Card -10 per sheet
H3027700710	Multivend - Product Card -10 per sheet
H3027900000	Multivend - LCD Board
H3028100000	Multivend - Coin Track Lead
H3028616026	Multivend Graphic Support Rev B
H3028716026	Multivend Coin Track Top and Bottom
H3028816026	Multivend Reject Chute Top and Bottom
H3028900000	Multivend Motor Driver Loom Rev B
H3029000000	Multivend Vend 2 controller Rev F
H3029100000	Multivend LCD Module
H3029200000	Multivend Coin Acceptor
H3029310000	Multivend Coin Sorters LH/RH Set
H3038800000	Multivend - Master Key
H3038900000	Multivend - Lock, Cam & 2 keys

6 ELECTRONIC SYSTEM

All the data associated with vend price / button / shelf groups is accessible on the Multivend Desktop App. This allows the user to change vend prices and modify the button to shelf relationship using drop down boxes. To obtain the app, please contact our team.

To modify the settings of the Multivend Controller board, link a laptop computer to the board via the USB port using a USB A to USB B cable. Once connected, open the Multivend desktop app.

6.1 Vend price & button to shelf relationships.

6.1.1 Vend prices

See Fig 6-1

On the Shelves tab of the Multivend app, select the required value from the Price dropdown box for the shelf you would like to change.

6.1.2 Button to shelf relationships

See Fig 6-2

On the Buttons tab of the Multivend app, using the Shelf dropdown boxes, assign each shelf to a button.

6.1.3 Auxiliary shelf options

See Fig 6-3 and 6-4

If you would like to have one button operate two or more shelves, it is possible to set the machine to look to another shelf (secondary shelf) once the primary shelf has been emptied.

a) Select the Aux Shelf dropdown box on the Shelves tab of the Multivend app for the primary shelf of your choice (for example Shelf 6 in Fig 6.3 below).

b) Select the secondary shelf you would like the machine to look towards once the primary shelf has been emptied (for example, in this case the user has asked the machine to look toward shelf 7 in Fig 6.4).

c) Repeat process (a) and (b) if you would like the machine to look toward a third shelf. If not, leave the Aux shelf setting as “Non” on the secondary shelf, to stop the machine from looking for another shelf. In the example below in Fig 6.3, it can be seen the machine will not look any further than shelf 7 (the shelf 7 section has been set to “Non”).

d) Once the settings have been updated on the Shelves tab of the Multivend as seen in Fig 6.3. Select the Buttons tab on the app as shown in Fig 6.4.

e) Set the button to shelf relationship to suit the settings on the Shelves tab (in Fig 6.4, it can be seen the user has set button 6 & 7 to look at shelf 6 as the primary shelf).

6.2 Other currencies

See Fig 6-5

Each coin sorter is set to accept one currency only. The Multivend Controller board is set to recognise the currency accepted by the coin sorter.

If the currency needs to be changed on the machine, the coin sorter will need to be replaced with another already programmed to accept the required currency.

Once the coin sorter has been replaced with the new version, the Multivend Controller board needs to be updated accordingly. To do so, open the Multivend app, select the Coins tab, select the required currency from the dropdown box and hit the Setup Channels button.

6.3 Machine unique ID

See Fig 6-6

Each Multivend has a unique device serial number which can be used to identify the machine. This number can be viewed in the Feedback tab on the Multivend app.

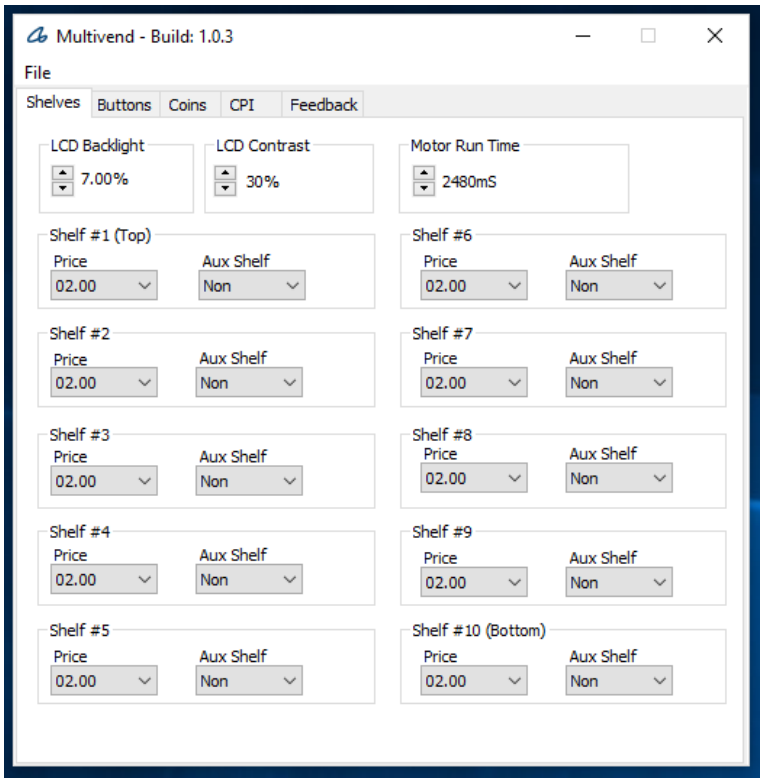

Figure 6.1 - Multivend Desktop App – shelf pricing and auxiliary shelf options

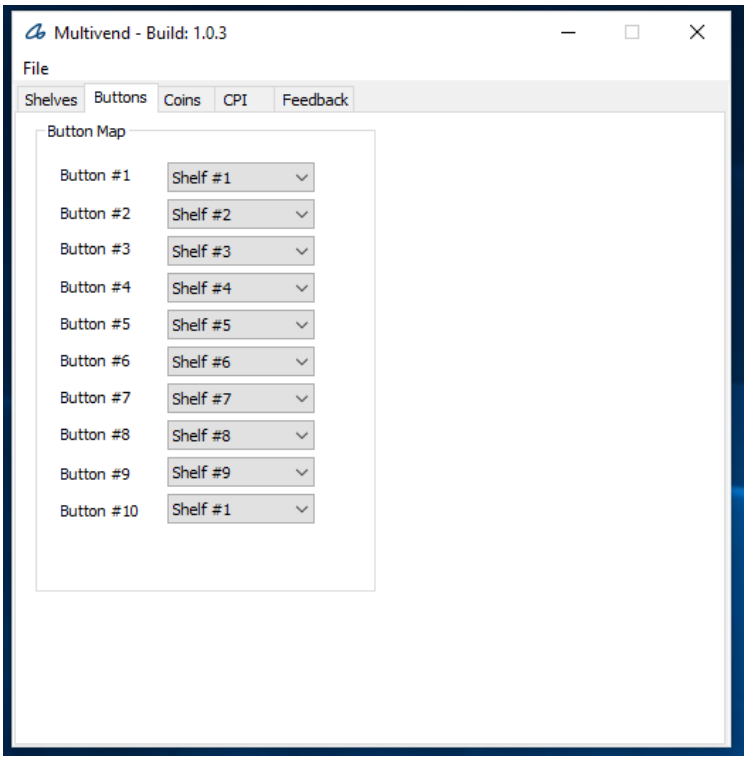

Figure 6.2 - Multivend Desktop App – Button to shelf relationship

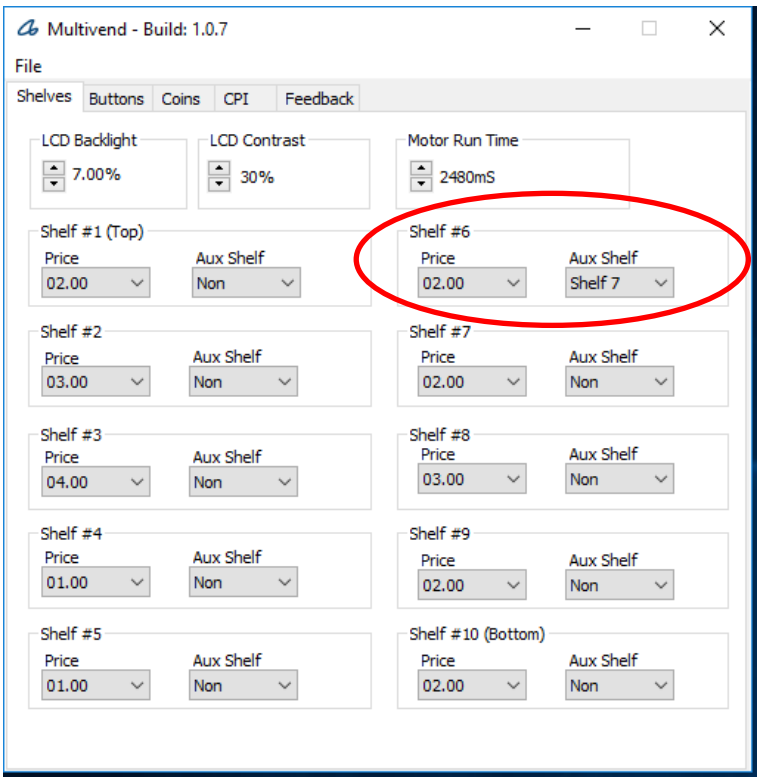

Figure 6.3 - Multivend Desktop App – Aux Shelf example.

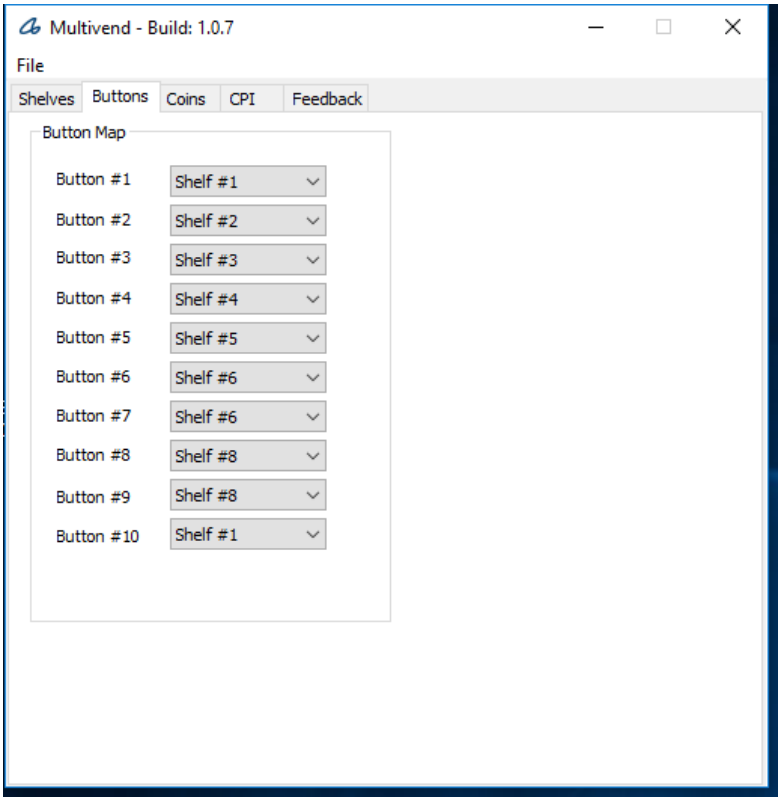

Figure 6.4 - Multivend Desktop App – Aux Shelf button example.

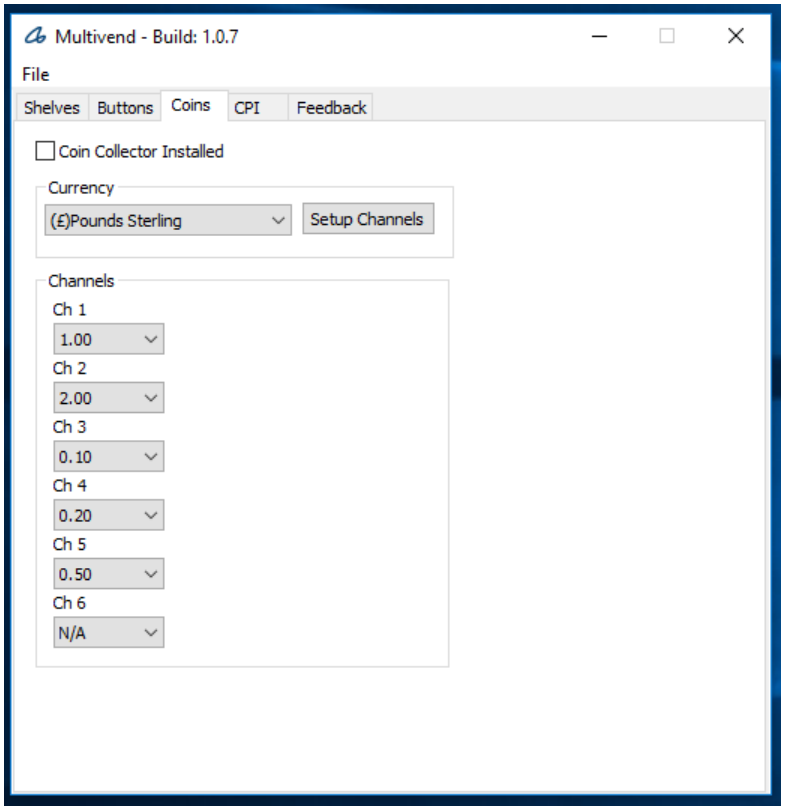

Figure 6.5 - Multivend Desktop App – Aux Shelf button example.

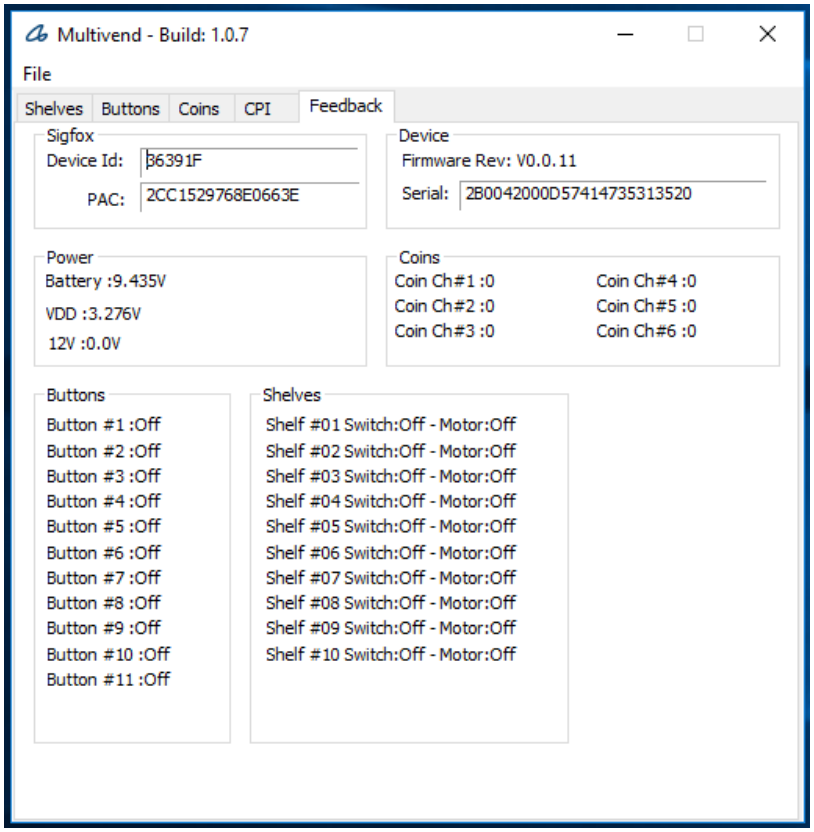

Figure 6.6 - Multivend Desktop App – Machine Feedback

7 MULTIVEND AND THE ENVIRONMENT

7.1 Raw Materials

The dispenser is constructed mainly of injection moulded plastic materials, principally high-grade Beyer ABS but with other specific types for particular engineering duties. These include High Impact Acrylic for the windows and product flap and Styrene for shelves and internal structural parts.

Aluminium extrusions are employed to add strength and rigidity in key areas, and a range of wire spring steel components are used as hinge pins. Fasteners are principally steel and aluminium.

7.2 Energy usage

The dispenser is powered from an internal battery pack providing a 9v.dc power pack. No external power is required.

7.3 Contamination

No contamination is emitted during the vend cycle or at any other time.

7.4 Waste production and disposal

The dispenser does not produce any waste material in the course of its operation. The products vended by the machine should each be considered on their individual merits in this context. The machine contains no hazardous materials and can be disposed of by any normal industrial waste equipment facility.

8 COINTRACK TYPES

8.1 Coin track types in use

In January 2019 we have introduced a new and improved coin mechanism - MKII. This section explains how to recognise which Coin Track your Multivend machine is using.

8.1.1 Coin track MKI

An installation manual is available for this type of coin track. Please contact our team to obtain a copy.

Fitted to all Multivend machines (S2000) models up to December 2018.

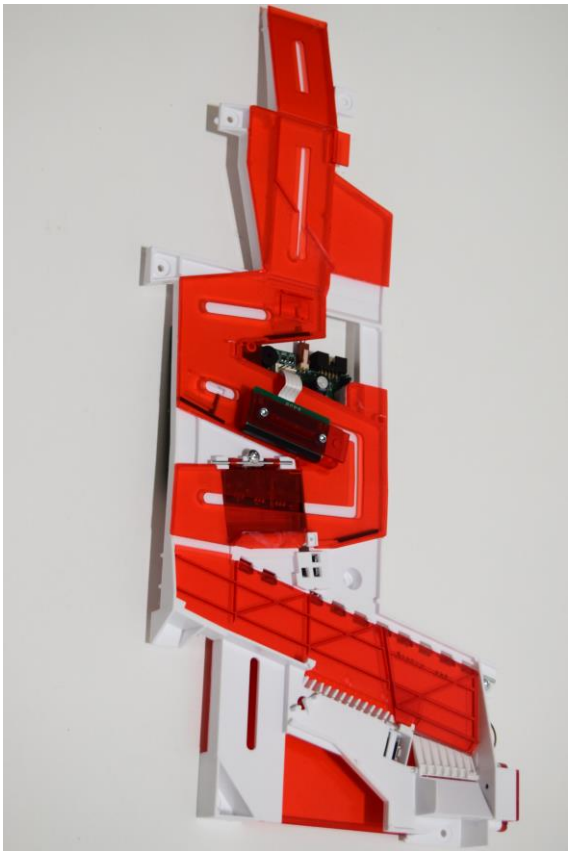

8.1.2 Coin track MKII

This coin track is being fitted to all Multivend machines from January 2019.

Unicorn Hygienics
Riverbank, 1 The Green
Tullynacross Road
Lisburn BT27 5SR
Northern Ireland

Multivend Technical Reference Manual

Issue 5 – 2019